REFER DRAWING S00 FOR GENERAL NOTES

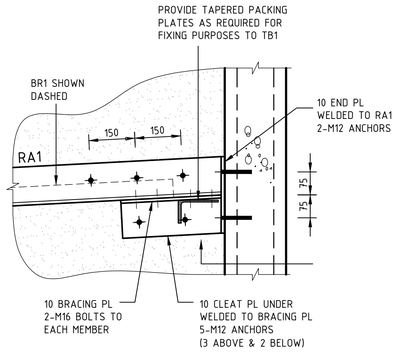

VIEW FROM ARROW 'Z'
1:10

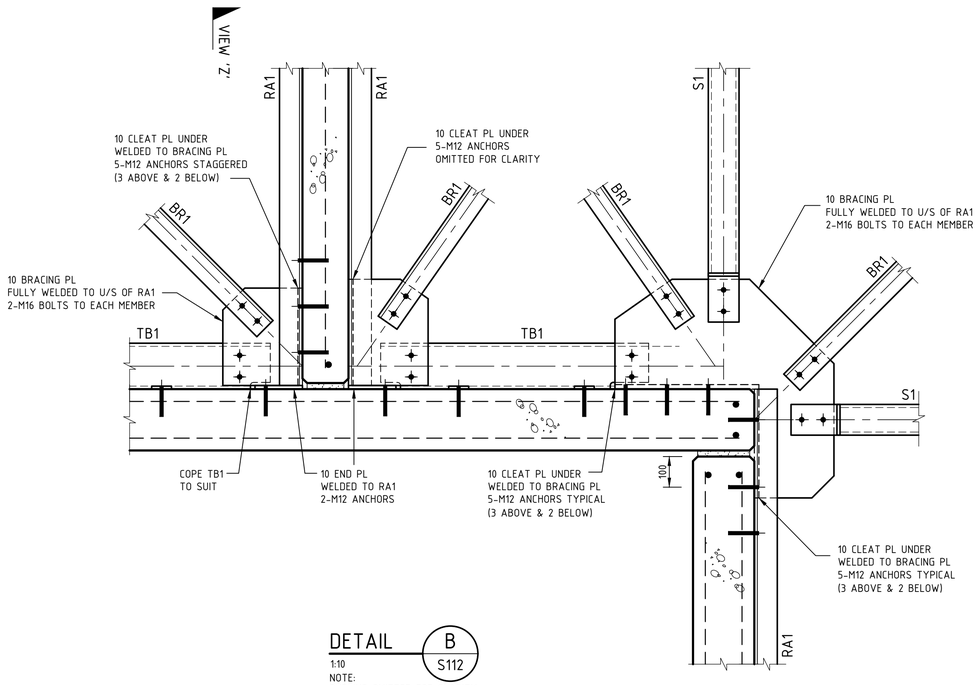

DETAIL B / S112
1:10
NOTE:
PURLINS OMITTED FOR CLARITY

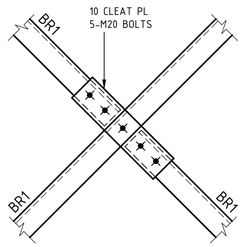

TYPICAL BR1 CROSS OVER DETAIL
NTS
NOTE:
PURLINS OMITTED FOR CLARITY

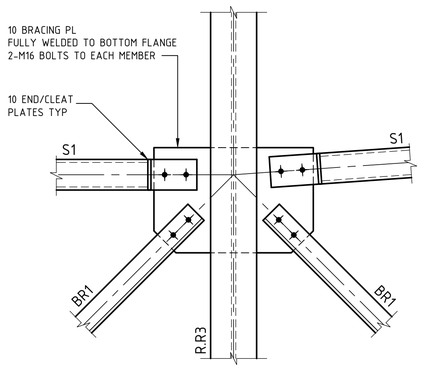

DETAIL A / S112
1:10
NOTE:
PURLINS OMITTED FOR CLARITY

No	REVISION	DRAWN	CHE'KD	DATE
AA	FOR CONSTRUCTION	DG	FK	19.10.18

PROJECT
THE WILLCOX APARTMENTS
AT: 117 PROSPECT ROAD
PROSPECT, SA 5082
FOR: CITIFY & BFC PTY LTD

DRAWING TITLE
ROOF DETAILS

Civil, Environmental, Mechanical, Fire, Lifts
Structural, Geotechnical, Electrical, Hydraulics, Green ESD
Level 6, 100 Pirie Street,
Adelaide SA 5000
Telephone 08 8238 4100
Facsimile 08 8410 1405
TMK CONSULTING ENGINEERS

SCALES AS SHOWN
DRAWN DG
DATE APRIL 2018
ENGINEER FK
CHECKED

© COPYRIGHT RESERVED

DRAWING No.
1802052-S415/AA

0 10 20 30 40 50 100mm
When sheet printed full size, the scale bar is 100mm.